HSF

NOTES:
Current Rating: 5.0AMP
Contact Resistance: 25mΩ Max
Withstand Voltage: 1000V AC/DC
Insulation Resistance: 5000MΩ Min
Operation Temperature: −55℃ to +105℃

Contact Material:Brass
Contact plating:Au Or Sn over Ni
Insulator Material:PBT+30%G.F UL94V−0
Shell Material:Spcc,Plating: Ni Plated
Rivet/Harpoon:Brass,Sn over Ni
Screw:Brass,Plating Ni Plated

Ordering Information

6201- B 15F X 15F X S0 X X

- B: Dim of Dual Port Center B=19.05mm
- X (Up Port Color): B=Black, U=Blue, W=White, G=Grey
- X (Down Port Color): B=Black, U=Blue, W=White, G=Grey
- S0: Contact Plating: S0=Gold Flash/Tin, S3=10u"Gold/Tin, S4=15u"Gold/Tin, S5=30u"Gold/Tin, SN=Tin
- X: Product Type: 1=PBT Normal, 2=PBT halogen free, 4=With Screw(Don't lock)

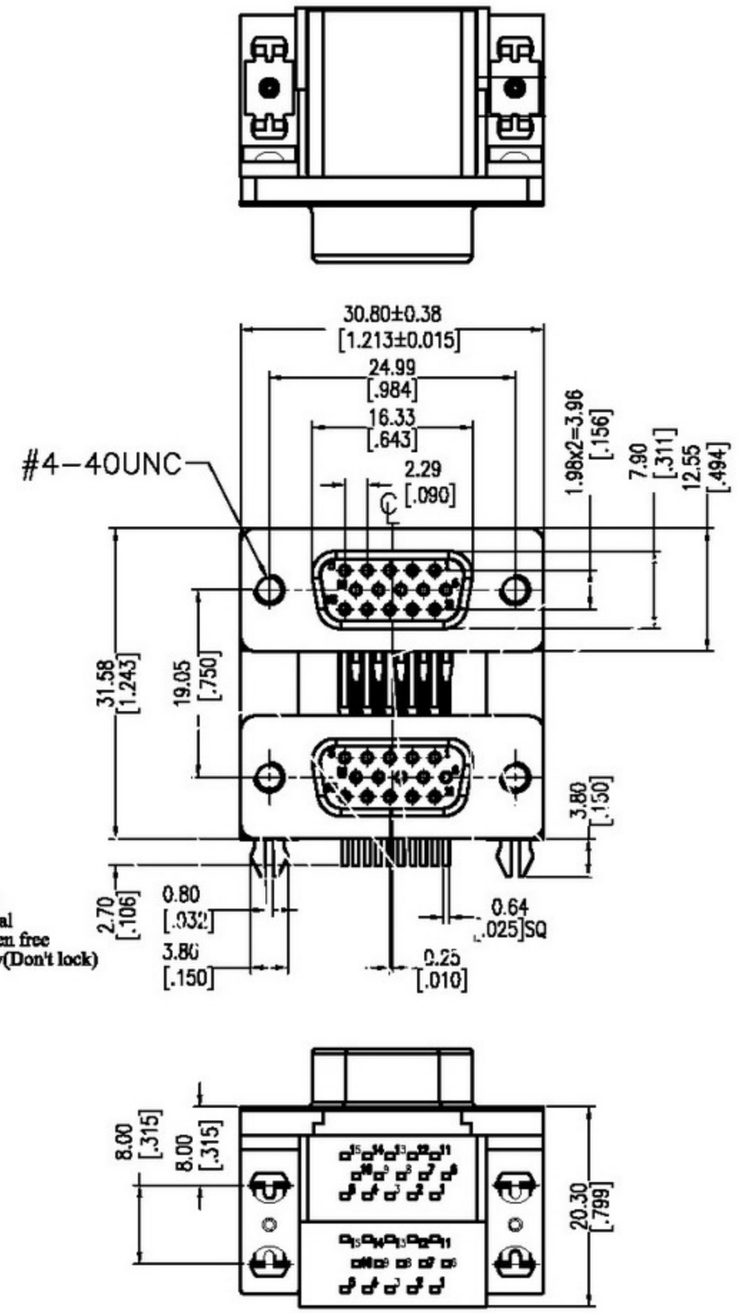

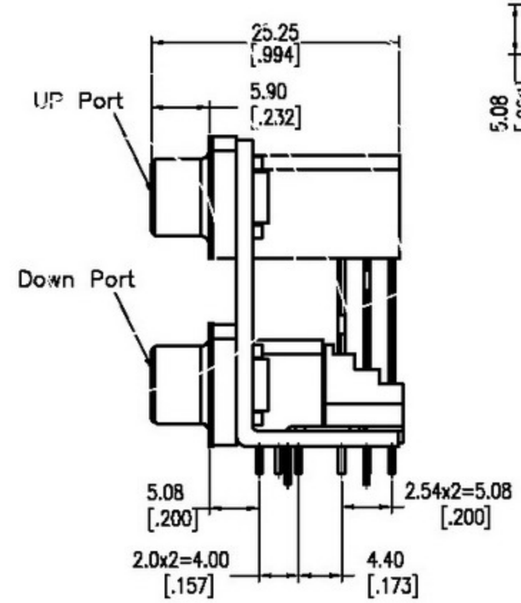

Recommended P.C.B Layout(Top Side)
(PCB BOARD TOLERANCE±0.05)

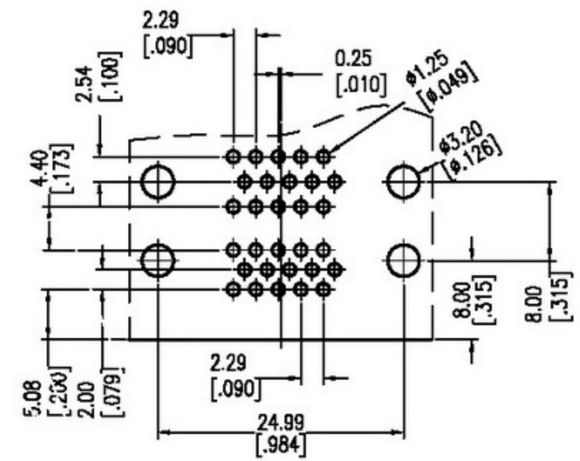

Part No.	Up Port Color	Down Port Color	Locating plate Color	Insulator Materail
6201−B15FU15FUS014	Blue	Blue	Blue	Normal
6201−B15FU15FUS011	Blue	Blue	Black	
6201−B15FB15FUS011	Black	Blue	Black	
6201−B15FU15FUS012	Blue	Blue	Black	Halogen Free
6201−B15FB15FUS012	Black	Blue	Black	